PART No. TGM-01-036-xx 11 REV.

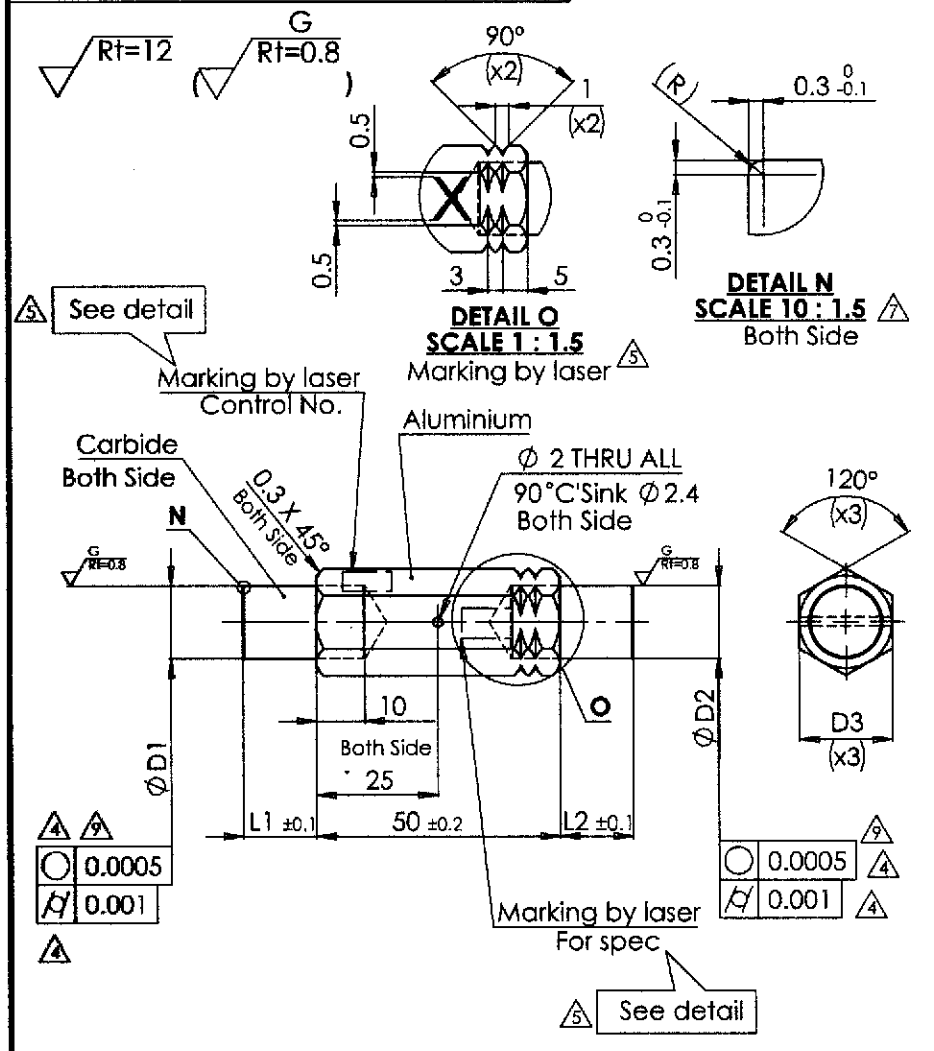
Rt=12
G
Rt=0.8
90°
(x2)
1
(x2)
0.5
0.5
3
5
X
DETAIL O
SCALE 1 : 1.5
Marking by laser 5
R
0.3 $^{0}_{-0.1}$
0.3 $^{0}_{-0.1}$
DETAIL N
SCALE 10 : 1.5 7
Both Side
5 See detail
Marking by laser
Control No.
Aluminium
Carbide
Both Side
0.3 X 45°
Both Side
N
Ø 2 THRU ALL
90°C'Sink Ø 2.4
Both Side
G
Rt=0.8
G
Rt=0.8
120°
(x3)
O
10
Both Side
25
ØD1
ØD2
D3
(x3)
L1 ±0.1
50 ±0.2
L2 ±0.1
4 9
○ 0.0005
⌭ 0.001
4
9
○ 0.0005 4
⌭ 0.001 4
Marking by laser
For spec
5 See detail

Item	ØD1	ØD2	D3	L1	L2	For Spec	Control No.	Check
-341	Ø7.578 $^{+0.007}_{+0.002}$	Ø7.694 $^{0}_{-0.005}$	15	20	15	Ø7.636 $^{\pm0.058}$ T6025,T6028	MPMA No.2, MPMA No.3	Preecha RQ163/25
-342	Ø5.77 $^{+0.007}_{+0.002}$	Ø5.89 $^{0}_{-0.005}$	8	20	15	Ø5.83 $^{\pm0.06}$ T6025		Preecha RQ163/25
-343	Ø30.005 $^{+0.0005}_{0}$	Ø 30.013 $^{0}_{-0.0005}$	33	**20**	15	Ø30 $^{+0.013}_{+0.005}$ A5D19-103		Preecha RQ205/25
-344	Ø9.002 $^{+0.0005}_{0}$	Ø 9.009 $^{0}_{-0.0005}$	12.7	15	15	Ø 9 $^{+0.009}_{+0.002}$ A5B25-1		Preecha RQ214/25
-345	Ø4.1 $^{+0.0036}_{+0.0016}$	Ø 4.15 $^{0}_{-0.002}$	7.14	15	15	Ø4.125 $^{\pm0.025}$ A5A42-2D		Preecha RQ235/25
-346	Ø5.125 $^{+0.0036}_{+0.0016}$	Ø 5.175 $^{0}_{-0.002}$	9.52	15	15	Ø5.15 $^{\pm0.025}$ A5A43-2B		Preecha RQ235/25
-347	Ø4.4 $^{+0.007}_{+0.002}$	Ø 4.6 $^{0}_{-0.005}$	7.14	15	15	Ø4.5 $^{\pm0.1}$ A5D26-1-MIA		Preecha RQ235/25
-348	Ø7.8 $^{+0.007}_{+0.002}$	Ø 8.2 $^{0}_{-0.005}$	12.7	15	15	Ø8 $^{\pm0.2}$ A5D26-1-MIA		Preecha RQ235/25
-349	Ø7.9 $^{+0.007}_{+0.002}$	Ø 8.1 $^{0}_{-0.005}$	12.7	15	15	Ø8 $^{\pm0.1}$ A5C67-1-M2A		Preecha RQ235/25
-350	Ø7.81 $^{+0.007}_{+0.002}$	Ø 7.91 $^{0}_{-0.005}$	12.7	25	15	Ø7.86 $^{\pm0.05}$ A5D19-2-03		Preecha RQ235/25
-351	Ø4.523 $^{+0.007}_{+0.002}$	Ø 4.603 $^{0}_{-0.005}$	7.14	20	15	Ø4.563 $^{\pm0.04}$ A5D19-2-03		Preecha RQ235/25
-352								
-353								
-354								
-355								
-356								
-357								
-358								
-359								
-360								

MinebeaMitsumi Inc.
Copy Issued
Uncontrolled
15/8/2568
Engineering
Design center
G/M.1 & M/A. DIV.

Remark : Reference old no. TGM-0100-1139-xx

REV.	ECN No.	DATE	NAME	DESCRIPTION
1	—	----	---	ENGINEERING RELEASE
10	—	16 NOV'22	Preecha	CH:Spec 15=>20,etc. RQ:436/22
11	—	1 FEB'24	Preecha	Ch:Item-294,-298,-304,-306Spec ØD1 $^{+0.0005}_{-0.0002}$ => ØD1 $^{+0.0005}_{0}$ etc.RQ:24/24
6	—	26 FEB'10	Preecha	ADD:Detiail Marking By Laser,etc.
7	—	25 MAY'10	Preecha	Ch:Marking R Control Lg0.3, etc
8	—	9 MAY'10	Preecha	Ch: L1=>15,etc. RQ:228/15
9	—	3 DEC'18	Preecha	Ch: ○ 0.0003 => ○ 0.0005 ,etc. RQ:662/18

UNLESS SPECIFIED C0.1 OR R0.1	
GENERAL TOLERANCE	
JIS B0405 MACHINING WORKING	
LESS THAN 0.5	±0.05
0.5 ~ 6	±0.1
6 ~ 30	±0.2
30 ~ 120	±0.3
120 ~ 400	±0.4
400 ~ 1000	±0.8
ANGLE	±1°

0.8S
6.3S
25S
100S
UNCUT

M/C. -
Q'ty -
List Request No. -
MATERIAL No. GTI30
Carbide , Aluminium
FINISH -
HEAT TREATMENT -
SCALE :
SHEET 18/18
3 RD ANGLE
UNIT (mm.)

DETAILED	DESIGNED	CHECKED	APPROVED
Phalachai	Aphisek	Preecha	Preecha

DATE 3 APR'03

NMB MinebeaMitsumi Inc.
General Machining Parts Div. 1

TITLE: A Type Plug Gauge

PART No. TGM-01-036-xx 11 REV.